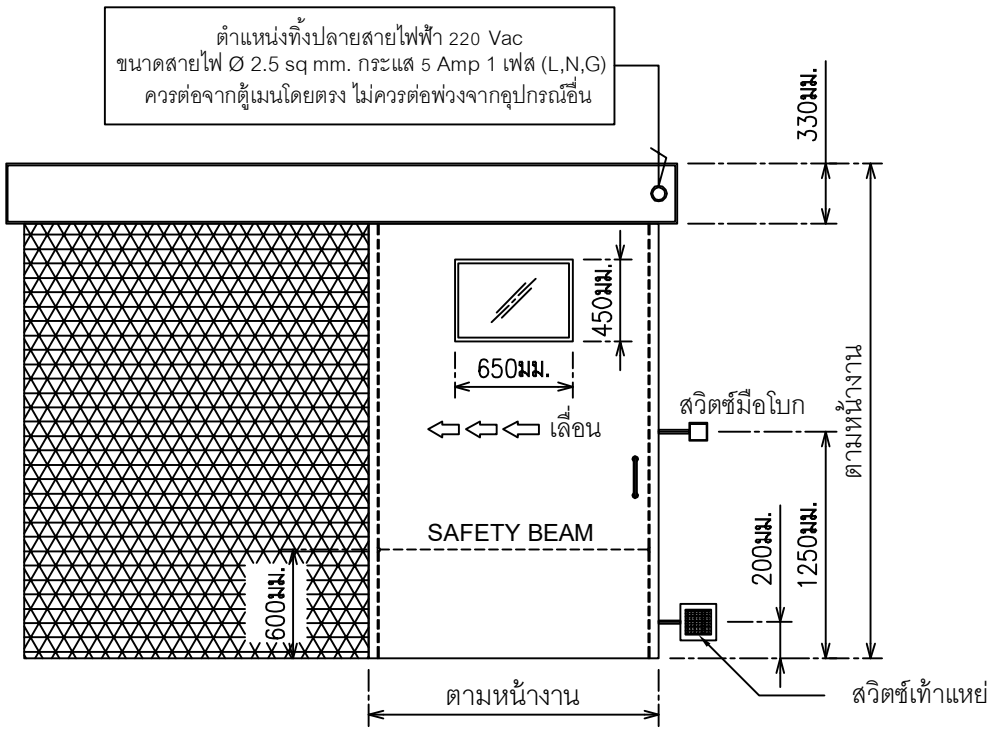

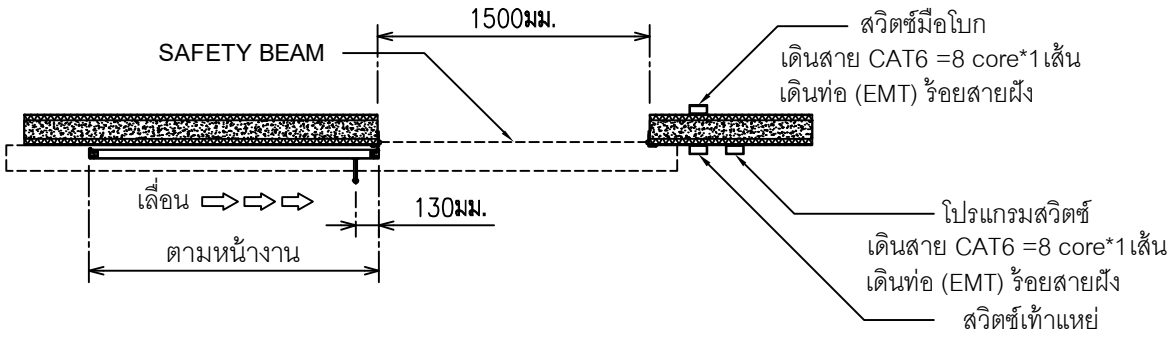

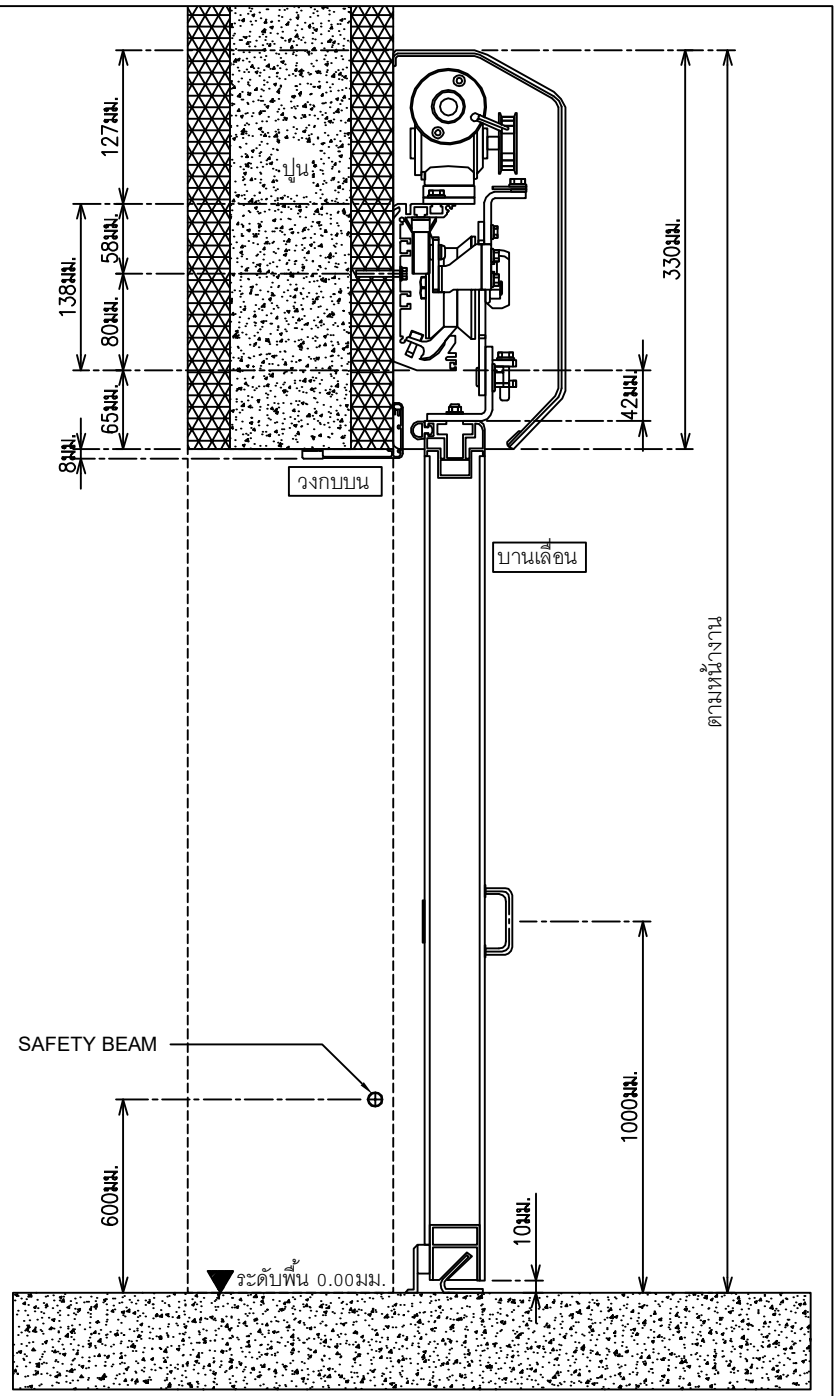

CLC AUTO DOOR

COMPLETE LINE CO.,LTD.
220 Soi Onnut35 , Sukhumvit77 Rd. , Suanluang Bangkok 10250
Tel. 02 348 4955-9 , Email. info@clc.co.th , www.clc.co.th

Model. SESAMO ERMETIKA
Project Name.
Sale Person.

Draw By
Approves By.
Date.